REVISIONS			
REV.	DESCRIPTION	DATE	BY
-	ECO 30751 (INITIAL RELEASE)	5/23/16	DKN
A	ECO 31005 (REDRAW IN SW)	7/19/2016	YP
B	ECO 33092 (ADD SREWS CONFIG)	11/9/17	DKN

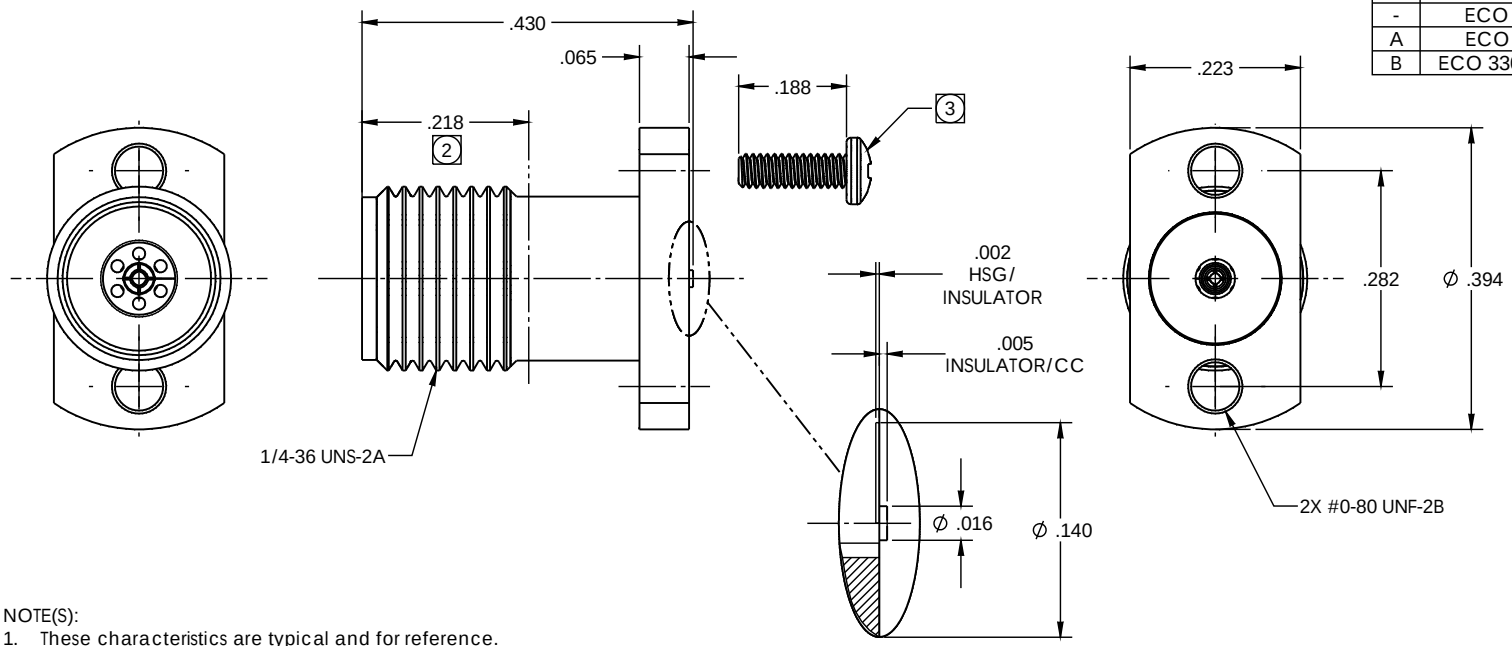

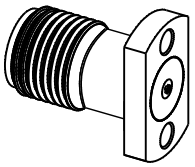

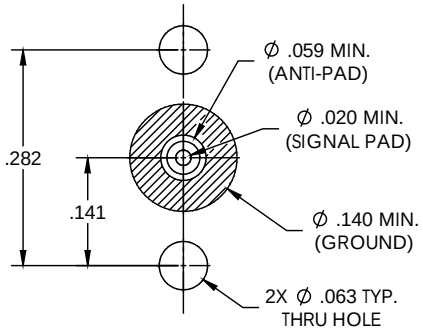

NOTE(S):
1. These characteristics are typical and for reference.
2. Mounting screws must not extend beyond this line.
3. Screws to be packaged and shipped unassembled. Qty 2.

DETAIL A
SCALE 16 : 1

RECOMMENDED PCB LAYOUT
FOOTING

MATERIAL(S):

Body & Screws:
303 Stainless Steel
Center Conductor:
BeCu Alloy C17300
Insulator:
PCTFE, white

ELECTRICAL(S):

Impedance: 50 Ohms Nominal
Frequency Range: DC to 40.0 GHz
VSWR: DC ~ 27GHz: 1.10 max
27 ~ 40GHz: 1.15 max
Insertion Loss: 0.25 dB maz
Working Voltage: 500 Vrms max @ Sea Level
Dielectric Withstand Voltage: 500 Vrms min.
Insulation Resistance: 5000 MegOhms min.
Contact Resistance:
Initial:
Center Contact: 3.0 Milliohms max
Outer Contact: 2.0 Milliohms max

MECHANICAL(S):

Mating Characteristics:
Interface per MIL-STD-348
Force to Engage & Disengage:
Torque: 2 inch-pounds max
Longitudinal Force: NA
Connector Durability:
500 Cycles min.
Permeability: Less than 2.0 mu.
Center Contact Retention:
Axial Force: 6 pounds min.
Radial Force: NA

ENVIRONMENTAL(S):

Temperature Range: -65°C to +165°C
Moisture Resistance:
MIL-STD-202, Method 103, Test Condition B
Corrosion:
MIL-STD-202, Method 101, Test Condition B
Vibration:
MIL-STD-202, Method 204, Test Condition A
Shock:
MIL-STD-202, Method 213, Test Condition 1

FINISH(ES):

Body & Screws:
Passivated
Center Conductor:
Cu 0.75um; Ni 2.50um; Au 0.75um

APPLICABLE CARLISLE IT DOCUMENTS

WORK STANDARD	PROD INSTRUC	ASSY INSTRUC
NA	NA	NA
-		

NOTICE
THIS DRAWING EMBODIES A CONFIDENTIAL PROPRIETARY DESIGN ORIGINATED BY CARLISLE INTERCONNECT TECHNOLOGIES & ALL DESIGN, MANUFACTURING, REPRODUCTION, USE & SALE RIGHTS REGARDING THE SAME ARE EXPRESSLY RESERVED. IT IS SUBMITTED UNDER A CONFIDENTIAL RELATIONSHIP FOR A SPECIFIED PURPOSE & THE RECIPIENT AGREES BY ACCEPTING THIS DRAWING NOT SUPPLY OR DISCLOSE ANY INFORMATION REGARDING IT TO ANY UNAUTHORIZED PERSON NOR GRANT ANOTHER RIGHTS. ANY SPECIAL FEATURES PECULIAR TO THIS DESIGN ALL PATENT RIGHTS HERETO ARE EXPRESSLY RESERVED BY CARLISLE INTERCONNECT TECHNOLOGIES, CERRITOS, CALIFORNIA 90703.

TOLERANCES AND NOTES
EXCEPT AS NOTED
DIMENSIONS ARE IN INCHES.
LINEAR .XX ±.015 .XXX ±.005 ANGULAR ±1/2°
FRACTION: ±1/32
1. MACHINE FINISH: 63 RMS
2. BREAK ALL SHARP EDGES .003 MAX.
3. MACHINED FILLETS .005 MAX.
4. MACHINED SURFACES SQUARE TO RESPECTIVE AXIS WITHIN .005 INCHES PER INCH.
5. MACHINED DIAMETERS CONCENTRIC WITHIN .002 T.I.R.
6. DIMENSIONS TO BE MET BEFORE PLATING.
7. CHAMFER ALL THREADS 45°.
8. THREADS PER H-28
9. REMOVE FRAYED EDGES ON TEFLON.
10. REMOVE ALL BURRS.

MATERIAL		
APPROVAL	INITIALS	DATE
DRAWN BY	YPHAN	07.13.16
CHECKED BY	-	-
TEST ENGR	-	-
QUALITY	-	-
DESIGN ENG	P.V.	05.25.16
MFG. ENGR	-	-
ECO APPRV	PV	12.13.17

-	-	-
MATERIAL	SPECIFICATION	PROCUREMENT

CARLISLE Interconnect Technologies Cerritos, CA 90703

TITLE: 2.92mm FEMALE 2 HOLE FLANGE POST CONTACT

SCALE	SUB-DIRECTORY/	SHEET 1 OF 1
8:1	_OUTLINE\	

SIZE	CAGE CODE	DRAWING NO.	REV.
C	30990	4K99981010	B

ENG-SW REV. E